MASTER®

THE PROFESSIONAL'S CHOICE SINCE 1953

KEROSENE FORCED AIR HEATER

User's Manual & Operating Instructions

Model Number
MH-400T-KFA

US

CONSUMER: READ AND SAVE THESE INSTRUCTIONS

IMPORTANT: Read and understand all of the directions in this manual before assembling, starting, or servicing the heater. Improper use of this heater can cause serious injury. Keep this manual for future reference. The requirements of local authorities having jurisdiction shall be followed.

⚠ DANGER **GENERAL HAZARD WARNING:** Be sure to comply with the instructions and warnings provided with this heater, or death, serious bodily injury and property loss, damage from the hazards of fire, explosion, burn,asphyxiation, and carbon monoxide poisoning can result.
Only persons who can follow and understand these instructions should use or service this heater. If you need heater information such as an instruction manual, labels, etcetera, contact the manufacturer.

⚠ DANGER Not for use in residential living areas or in non-adequately ventilated enclosed spaces. For outdoor use. Indoor use permitted for: The temporary heating of adequately ventilated buildings or structures under construction, alteration or repair.

PINNACLE CLIMATE TECHNOLOGIES™

Sauk Rapids, MN 56379 USA • Toll Free (800) 641-6996
Fax: 320-251-2922 • Web: www.masterindustrialproducts.com • Email: info@pinnacleclimate.com

© 2019 Pinnacle Climate Technologies, Inc.

MASTER
THE PROFESSIONAL'S CHOICE SINCE 1953

NEVER LEAVE HEATER UNATTENDED WHILE BURNING OR WHILE CONNECTED TO A POWER SOURCE

Table of Contents

Safety Information 2-3
Features 3
Specifications 4
Unpacking 5
Assembly 5-6
Operation 6-8
Maintenance 9-11
Wiring Diagram 11
Exploded View 12
Parts List 13
Troubleshooting Guide 14
Warranty 15

⚠WARNING **FIRE, BURN, INHALATION AND EXPLOSION HAZARD.** Keep combustibles such as building materials, paper or cardboard a safe distance away from the heater as recommended by these instructions. Never use the heater in spaces which contain products such as gasoline, solvents, paint thinners, dust particles, volatile or airborne combustibles or any unknown chemicals. This is an unvented portable heater. It uses air (Oxygen) from the area in which it is used. Adequate combustion and ventilation air must be provided. Refer to "Ventilation" on page 7.

⚠WARNING **DO NOT OPERATE THIS HEATER UNTIL YOU HAVE READ AND THOROUGHLY UNDERSTAND THESE SAFETY AND OPERATING INSTRUCTIONS.** Failure to comply with the precautions and instructions provided with this heater can result in death, serious bodily injury, property loss or damage from the hazards of fire, soot production, explosions, burns, asphyxiation or carbon monoxide poisoning. Only persons who can read and understand these instructions should use or service this heater.

⚠ **WARNING:** This product can expose you to chemicals, including lead, which is known to the State of California to cause birth defects or other reproductive harm. For more information visit www.p65warnings.ca.gov

MASSACHUSETTS RESIDENTS: Massachusetts state law prohibits the use of this heater in any building which is used in whole or in part for human habitation. Use of this heating device in Massachusetts requires local fire department permit (M.G.L.C. 148, Section 10A).

NEW YORK CITY RESIDENTS: The New York City Fire Code prohibits the storage, handling and use of kerosene fueled heaters for space heating. Any person violating that provision may be punished by a fine up to $10,000 and a term of imprisonment of up to 6 months.

Safety Information

⚠DANGER ***Indicates an imminently hazardous situation which, if not avoided, WILL result in death or serious injury.***

⚠WARNING ***Indicates a potentially hazardous situation which, if not avoided, COULD result in death or serious injury.***

⚠CAUTION ***Indicates a potentially hazardous situation which, if not avoided, MAY result in minor or moderate injury.***

This is a kerosene direct-fired, forced air heater. Kerosene forced air heaters are primarily intended for use for temporary heating of buildings under construction, alteration or repair. Direct-fired means that all of the combustion products of the heater enter the heated space. This appliance is rated at 98% combustion efficiency, but does produce small amounts of carbon monoxide. Carbon monoxide is toxic.

⚠DANGER **CARBON MONOXIDE POISONING MAY LEAD TO DEATH!**

Humans can tolerate small amounts of carbon monoxide, and precautions should be taken to provide proper ventilation. Failure to provide proper ventilation according to this manual can result in death. Early signs of carbon monoxide poisoning resemble the flu. Symptoms of improper ventilation are: Symptoms of improper ventilation / carbon monoxide poisoning are:

Headache • Dizziness • Nausea • Dry Mouth Sore Throat • Burning of Nose and Eyes

For optimal performance of this heater, it is strongly suggested that K-1 kerosene be used. K-1 kerosene has been refined to virtually eliminate contaminants, such as sulfur, which can cause a rotten egg odor during the operation of the heater. Diesel may also be used if K-1 kerosene is not available. Be advised that diesel does not burn as clean as K-1 kerosene, and care should be taken to provide more fresh air ventilation to accommodate any added contaminants that may be added to the heated space. Use of diesel may result in more periodic maintenance.

- CSA certified for use with K-1 kerosene, no. 1 & no. 2 diesel, JP8/Jet A Fuel

⚠WARNING ***Risk of indoor air pollution!***

- Use this heater only in well ventilated areas! Provide, at heater level, at least a three square foot (2,800 sq. cm) opening of outside air for every 100,000 BTU/hr of heater rating.
- People with breathing problems should consult a physician before using the heater.
- Carbon Monoxide Poisoning: Early signs of carbon monoxide poisoning resemble flu-like symptoms such as headaches, dizziness, and/or nausea. If you have these symptoms, your heater may not be working properly.
- Get fresh air at once! Have the heater serviced. Some people are more affected by carbon monoxide than others. These include pregnant women, those with heart or lung problems, anemia, or those under the influence of alcohol, or at high altitudes.

⚠WARNING ***Risk of burns / fire / explosion!***

- NEVER use fuels such as gasoline, benzene, paint thinners, crankcase drainings, or other oil compounds in this heater (RISK OF FIRE OR EXPLOSION).

© 2019, Pinnacle Climate Technologies, Inc.

Safety Information (Continued)

- NEVER refill the heater's fuel tank while heater is operating or still hot. This heater is EXTREMELY HOT while in operation.
- Keep all combustible materials away from this heater.
- NEVER block air inlet (rear) or air outlet (front) of heater.
- NEVER use duct work in front or at rear of heater.
- NEVER move or handle heater while still hot.
- NEVER transport heater with fuel in its tank.
- If equipped with a thermostat, the heater may start at any time.
- ALWAYS locate heater on a stable and level surface.
- ALWAYS keep children and animals away from heater.
- Bulk fuel storage should be a minimum of 25 ft. from heaters, torches, portable generators, or other sources of ignition. All fuel storage should be in accordance with federal, state, or local authorities having jurisdiction.
- Never use this heater in living or sleeping areas.
- NEVER use this heater where flammable vapors may be present.

⚠WARNING ***Risk of electric shock!***

- Use only the electrical power (voltage and frequency) specified on the model plate of the heater. Use only a three- prong, grounded outlet and extension cord.
- ALWAYS install the heater so that it is not directly exposed to water spray, rain, dripping water, or wind.
- ALWAYS unplug the heater when not in use.

Minimum Clearance From Combustibles	
	MH-400T-KFA
Top	4 ft. (125 cm)
Sides	4 ft. (125 cm)
Front	8 ft. (250 cm)

Features

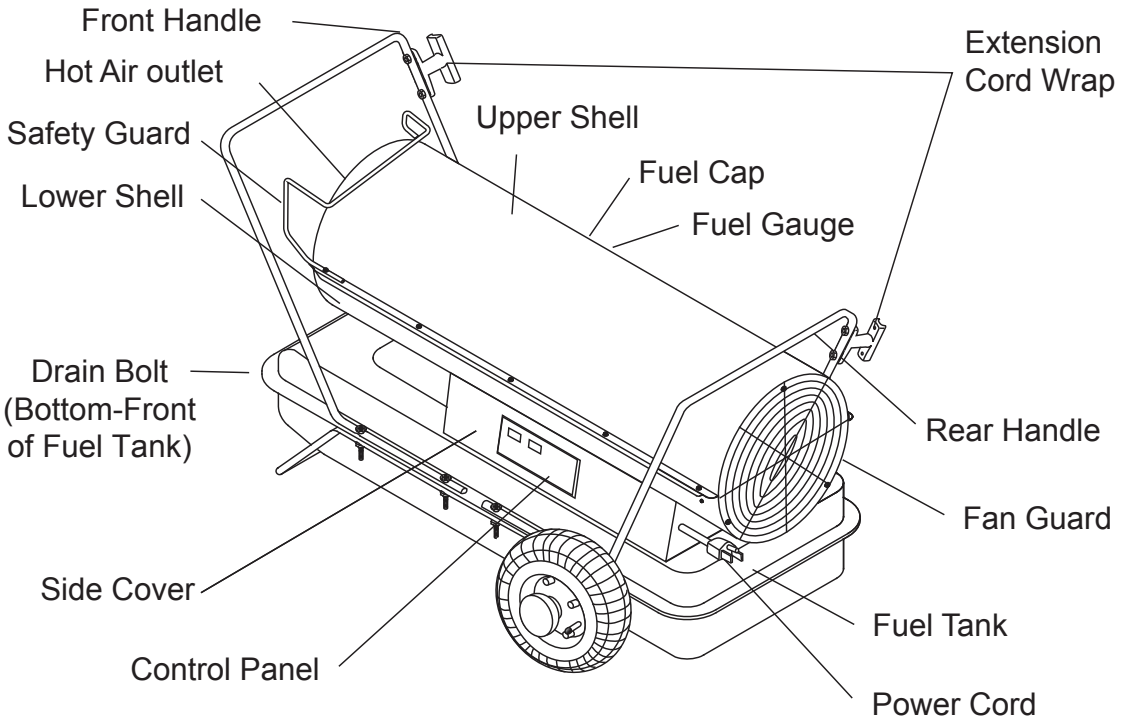

Figure 1. Features of Model MH-400T-KFA

Unpacking

Remove the heater and all of the packaging materials from the shipping carton.

NOTE: Save the box and packaging materials for future storage.

Check the diagram on the following page to be sure that you have all of the parts required to assemble your heater. If you find that any parts are missing, call 800-641-6996 for assistance in receiving the missing components.

Specifications

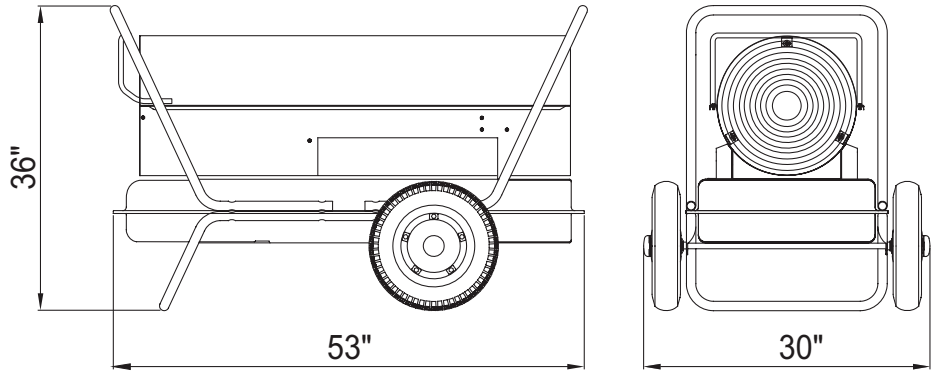

	MH-400T-KFA
L	53"
W	30"
H	36"

Figure 2. Dimensions of Model MH-400T-KFA

© 2019, Pinnacle Climate Technologies, Inc.

Assembly

Model	MH-400T-KFA
Wheel	Yes
Wheels and Axle	Yes
Wheel Caps	No
Front Handle	Yes
Rear Handle	Yes
Cord Wraps	Yes
Screws, Nuts, and Washers	Yes
Cotter Pins and Bushings	Yes

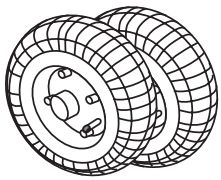

Wheels (Pneumatic)

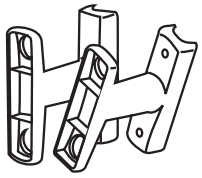

Cord Wraps

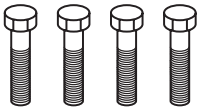

Screws (L)

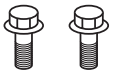

Screws (S)

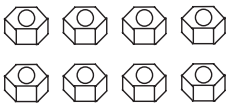

Nuts

Bushings

Cotter Pins

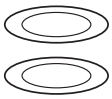

Flat Washers (S)

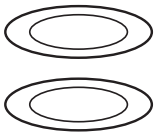

Flat Washers (L)

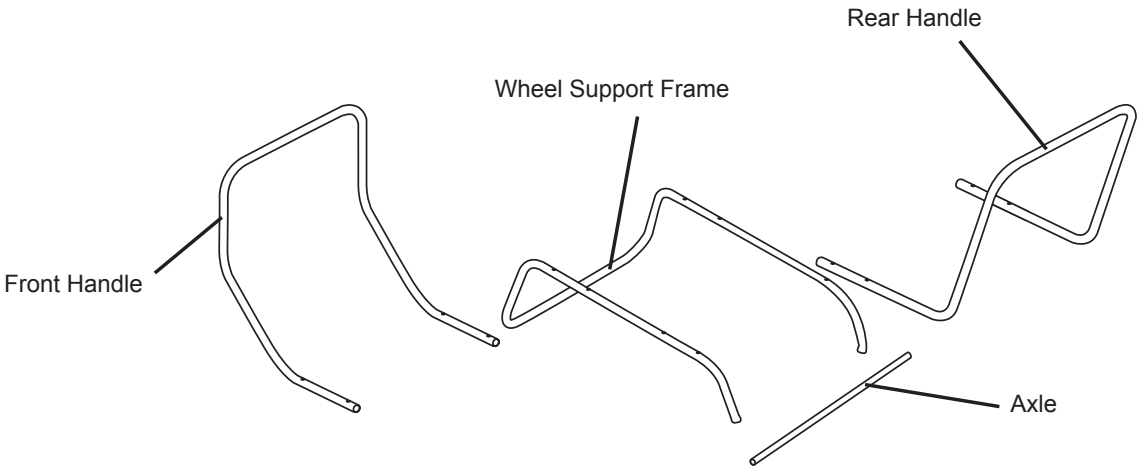

Figure 3. Component Identification

TOOLS REQUIRED

- MEDIUM PHILLIPS SCREWDRIVER
- OPEN END OR ADJUSTABLE WRENCH
- LONG NOSE PLIERS

ASSEMBLING WHEEL & HANDLE

1. Slide axle through wheel support frame. Install wheel bushings, flat washers (S) and wheel on axle.

NOTE: When installing wheels, tube valve should face out from support frame (Figure 4).

2. Place flat washers (L) and cotter pins on axle ends and bend cotter pins with long nose pliers to secure.
4. Place heater on wheel support frame. Make sure air inlet end (rear) of heater is over wheels. Align the holes on fuel tank flange. Insert screws through handles (front and rear), fuel tank flange, and wheel support frame as shown in Figure 4 and attach nut finger tight after each screw is inserted.
5. After all screws are inserted, tighten nuts firmly.

⚠CAUTION ***Do not operate heater without support frame fully assembled.***

© 2019, Pinnacle Climate Technologies, Inc.

Operation

KEROSENE (K-1)
For optimal performance of this heater, it is strongly suggested that K-1 kerosene be used. K-1 kerosene has been refined to virtually eliminate contaminants, such as sulfur, which can cause a rotten egg odor during the operation of the heater. Diesel may also be used if K-1 kerosene is not available. Be advised that diesel does not burn as clean as K-1 kerosene, and care should be taken to provide more fresh air ventilation to accommodate any added contaminants that may be added to the heated space. Use of diesel fuel may result in more periodic maintenance.

- CSA certified for use with K-1 kerosene, no. 1 & no. 2 diesel, JP8/Jet A Fuel

NOTE: Kerosene should only be stored in a blue container that is clearly marked "Kerosene." Never store kerosene in a red container. Red is associated with gasoline.

- NEVER store kerosene in the living space. Kerosene should be stored in a well ventilated area outside the living area.
- NEVER use fuel such as, benzene, alcohol, white gas, camp stove fuel, paint thinners, or other oil compounds in this heater. THESE ARE VOLATILE FUELS THAT CAN CAUSE A FIRE OR EXPLOSION.
- NEVER store kerosene in direct sunlight or near a source of heat.
- NEVER use kerosene that has been stored from one season to the next. Kerosene deteriorates over time. OLD KEROSENE WILL NOT BURN PROPERLY IN THIS HEATER.
- Use K-1 kerosene in this heater. A suitable substitute is diesel fuel.

OVERVIEW OF HEATER DESIGN

Fuel System: This heater is equipped with an electric magnet pump that forces fuel through the fuel line connected to the fuel intake, and then through a nozzle in the burner head. This fuel is then sprayed into the combustion chamber in a fine mist.

"SureFire Ignition": The electronic ignitor sends voltage to a specially designed spark plug. The spark plug ignites the fuel and air mixture.

The Air System: The heavy duty motor turns a fan that forces air into and around the combustion chamber. Here, the air is heated and then forced out the front of the heater.

THE SAFETY SYSTEM

Temperature Limit Control: This heater is equipped with a Temperature Limit Control designed to turn the heater off should the internal temperature rise to an unsafe level. If this device activates and turns your heater off, it may require service. Once the temperature falls below the reset temperature, you will be able to start your heater.

Electrical System Protection: This heater's electrical system is protected by a fuse that protects it and other electrical components from damage. Fuse is located inside of an in-line "FUSE BARREL". If your heater fails to operate, check this fuse first and replace as needed. Refer to Specification Chart on page 4.

Flame-Out Sensor: Utilizes a photocell to monitor the flame in burn chamber during normal operation. It will cause the heater to shut off should the burner flame extinguish.

FUELING YOUR HEATER

NEVER fill the heater fuel tank in the living space: fill the tank outdoors.
Do not overfill your heater and be sure heater is leveled.

IMPORTANT: REGARDING FIRST IGNITION OF HEATER. The first time you light the heater, it should be done OUTDOORS. This allows the oils, etc. used in manufacturing the heater to burn off outside.

Model	Internal Shut-off Temp. +/-10 Degrees	Reset Temp. +/-10 Degrees
MH-400T-KFA	176°F / 80°C	149°F / 65°C

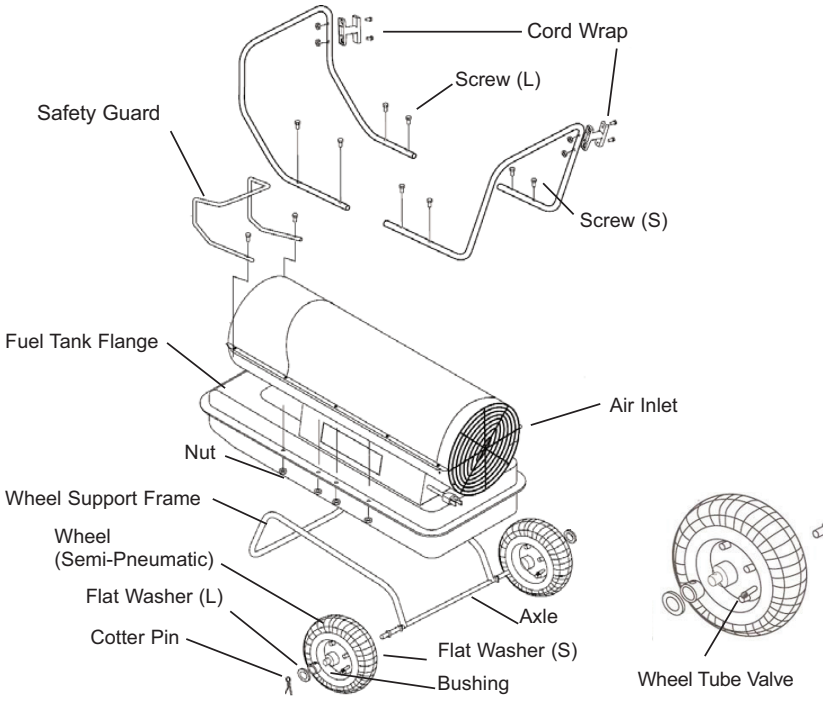

Figure 4. Wheel and Handle Assembly

Operation (Continued)

VENTILATION

⚠CAUTION ***Risk of indoor air pollution. Use heater only in well ventilated areas.***

Provide a fresh air opening of at least 3 square feet. (2,800 sq. cm.) for each 100,000 BTU/Hr. rating. Provide extra fresh air if more heaters are being used.

TO START HEATER

1. Fill fuel tank with K-1 kerosene.
2. Attach fuel cap.
3. Plug power cord into three-prong, grounded extension cord. Extension cord must be at least six feet long.

Extension Cord Wire Size Requirements:

- 6 to 10 feet long, use 14 AWG conductor.
- 101 to 200 feet long, use 12 AWG conductor.
- 201 to 300 feet long, use 10 AWG conductor.
- 301 to 400 feet long, use 8 AWG conductor.
- 401 to 500 feet long, use 6 AWG conductor.

4. Push "OPERATION BUTTON" (see Figure 5). Power indicator lamp and room temperature display will light and heater will start. Push the up and down arrow keys on the control panel to adjust the thermostat settings.

If heater does not start, the thermostat setting may be too low. Push "TEMP CONTROL UP ARROW" to higher setting to start heater. If heater still does not start, see Troubleshooting Guide on page 14.

NOTE: The major electrical components of this heater are protected by a circuit breaker (fuse) mounted to the power switch. If your heater fails to start, check this first and replace as necessary. You should also check your power source to insure that proper voltage and frequency are being supplied to the heater.

⚠CAUTION **NEVER FILL THE FUEL TANK INDOORS. ALWAYS FILL THE TANK OUTDOORS. BE SURE THAT THE HEATER IS ON LEVEL GROUND WHEN FUELING, AND NEVER OVERFILL THE FUEL TANK.**

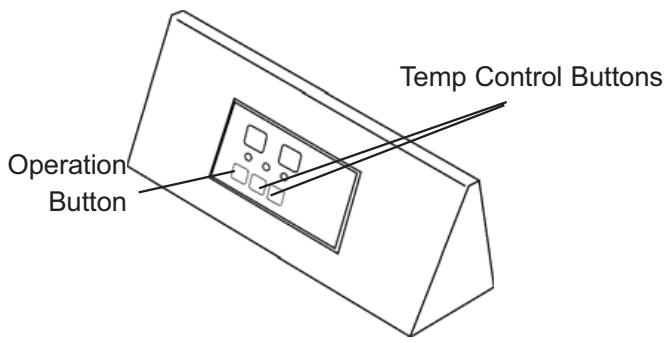

Figure 5. Control Panel

TO STOP HEATER

⚠CAUTION ***Never unplug heater while heater is running.***

Heater must go through cooling cycle. The cooling cycle cools the combustion chamber.

Damage to heater can occur if combustion chamber is not cooled. Do not restart heater until cooling cycle is complete.

1. Push "OPERATION BUTTON" (see Figure 5). This will cause heater flame to go out. The motor will continue to run during the cooling cycle. This allows the fan to cool the combustion chamber. When the cooling cycle (approx. 2 minutes) is finished, the motor will stop. Do not unplug heater until cooling cycle is finished.
2. Disconnect heater from power source.
3. To temporarily stop heater, set thermostat at a temperature lower than air around heater. Heater will cycle back on if air temperature around heater matches thermostat setting.

TO RESTART HEATER

⚠CAUTION ***DO NOT restart heater until cooling cycle is finished.***

The cooling cycle cools the combustion chamber.

1. Wait until cooling cycle is finished after stopping heater.
2. Repeat steps under TO START HEATER.

LONG-TERM STORAGE OF HEATER

1. Remove drain nut from rear bottom side of fuel tank by unscrewing nut and drain. See Figure 6 on page 8.
2. Using a small amount of kerosene, swirl and rinse the inside of the tank.

NEVER MIX WATER WITH KEROSENE, as it will cause rust inside the tank. Pour the kerosene out, making sure that you remove it all.

IMPORTANT: Do not store kerosene over summer for use during next heating season. Using old fuel may damage heater.

3. Reinstall drain bolt as follows:
   i. Insert bolt's seal head fully into drain hole so that flange is flush to tank's bottom. See Figure 6.
   ii. Insert seal cap fully into head hole so that cap flange is flush to head flange. See Figure 6.

© 2019, Pinnacle Climate Technologies, Inc.

Operation (Continued)

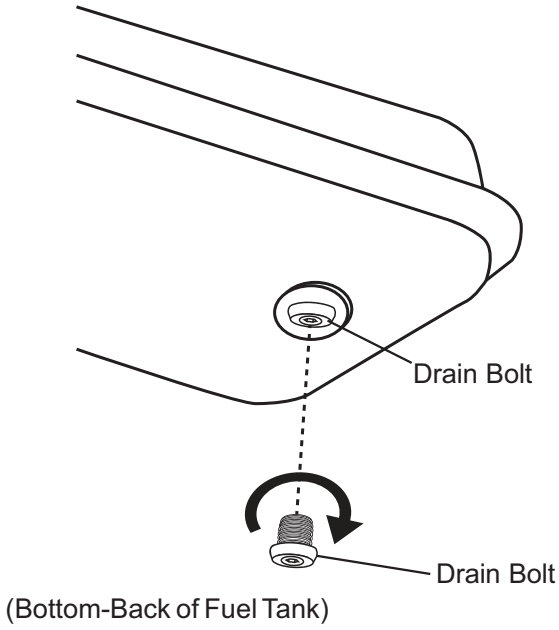

Figure 6. Drain Bolt Reinstall

IMPORTANT: Reinstall bolt fully into hole in tank; otherwise it will not seal completely.

- Make sure storage place is free of dust and corrosive fumes.
- Store the heater in the original box with the original packing material and keep the USER'S MANUAL with heater.

Maintenance

⚠WARNING ***Never service heater while it is plugged in or while hot!***

NOTE: USE ORIGINAL EQUIPMENT REPLACEMENT PARTS. Use of third-party or other alternate components will void warranty and may cause unsafe operating conditions.

FUEL TANK

- Flush every 200 hours of operation or as needed (see Long-Term Storage of Heater, page 7).

FAN BLADES

CLEAN EVERY SEASON OR AS NEEDED.

1. Remove upper shell.
2. Use Allen wrench to loosen set screw which holds fan blade to motor shaft.
3. Slip fan blade off motor shaft.
4. Clean fan blade using soft cloth moistened with kerosene or solvent.
5. Dry fan blade thoroughly.
6. Reinstall fan blade to motor shaft.
7. Place fan hub flush with end of motor shaft.
8. Place set screw on flat end of shaft.
9. Tighten screw firmly (40-50 inch pounds/ 4.5-5.6 N-m). Reinstall upper shell

NOZZLE

Remove dirt in nozzle as needed (see page 9).

1. Remove upper shell.
2. Remove fuel line B from burner assembly by using wrench.
3. Remove burner head from burner assembly.
4. Remove lead wire from spark plug.
5. Remove spark plug from burner head.
6. Carefully remove nozzle from burner head using socket wrench.
7. Blow compressed air through face of nozzle (This will remove any dirt).
8. Inspect nozzle for damage. If damaged or clogged, replace nozzle.
9. Make sure plug is in place on burner head.
10. Reinstall nozzle into burner head and tighten firmly (175-200 inch-pounds).
11. Reinstall spark plug in burner head.
12. Attach burner head to combustion chamber (directions continued on next page).

© 2019, Pinnacle Climate Technologies, Inc.

Maintenance (Continued)

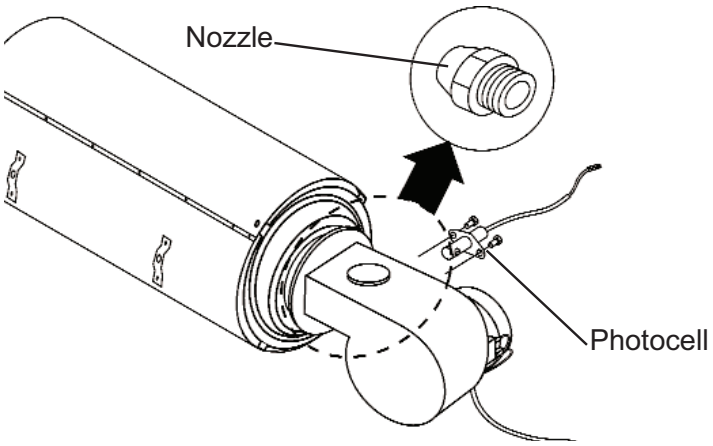

Figure 7. Nozzle Replacement

NOZZLE (Continued)

13. Attach spark plug wire to spark plug
14. Attach fuel line to burner head and tighten firmly.
15. Replace upper shell.
16. Attach ignitor wire to spark plug.
17. Attach fuel and air line hoses to burner head.
18. Reinstall fan blade and upper shell.

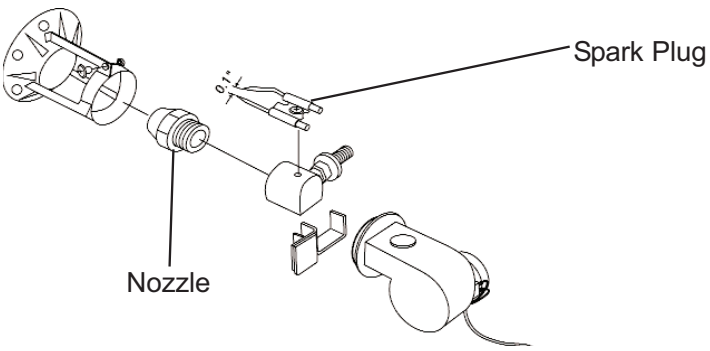

Figure 8. Nozzle

SPARK PLUG

CLEAN AND REGAP EVERY 600 HOURS OF OPERATION OR REPLACE AS NEEDED.

1. Remove upper shell.
2. Remove spark plug wire from spark plug (see Figure 9).
3. Remove spark plug from burner head using medium Phillips screwdriver.
4. Clean and regap spark plug electrodes to 3.5 mm gap (+/- 0.5mm).
5. Reinstall spark plug into burner head.
6. Attach spark plug wire to spark plug.
7. Reinstall upper shell.

PHOTOCELL

CLEAN PHOTOCELL ANNUALLY OR AS NEEDED.

1. Remove upper shell.
2. Remove fan (see FAN BLADES, page 8).
3. Remove photocell from its mounting bracket
4. Clean photocell lens with cotton swab.

TO REPLACE: 1. Remove side cover near Operation switch.

2. Disconnect wires from Operation switch and remove photocell.
3. Disconnect wires from circuit board and remove side cover.
4. Install new photocell and attach wires to circuit board.
5. Replace switch wires to operation switch and side cover.
6. Replace fan and upper shell.

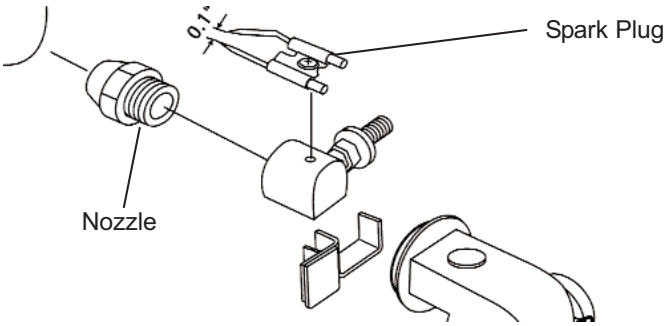

Figure 9. Spark Plug Replacement

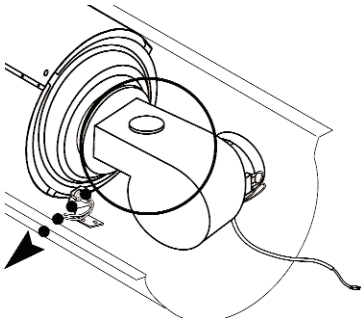

Figure 10. Photocell Lead Wire

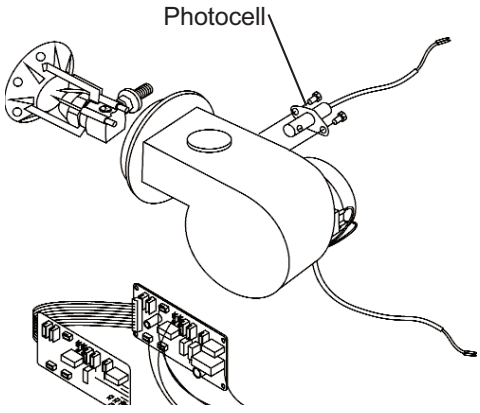

Figure 11. Photocell Replacement

Maintenance (Continued)

FUEL FILTER

CLEAN TWICE PER HEATING SEASON OR AS NEEDED.

Fuel filter A on fuel cap (see Figure 12)

1. Remove fuel cap.
2. Take out fuel filter with clean kerosene.
3. Wash fuel filter with clean kerosene.
4. Replace fuel filter on fuel tank.
5. Replace fuel cap on fuel tank.

Fuel filter B on fuel line (see Figure 12)

1. Remove fuel line A from fuel pump by using wrench.
2. Take out fuel line from fuel tank by pulling out fuel filter gasket.
3. Remove fuel filter assembly from fuel line
4. Wash fuel filter in clean kerosene.
5. Reassemble fuel filter in reverse order.

Use of diesel may require additional maintenance. **Improper maintenance can lead to poor combustion and soot production.**

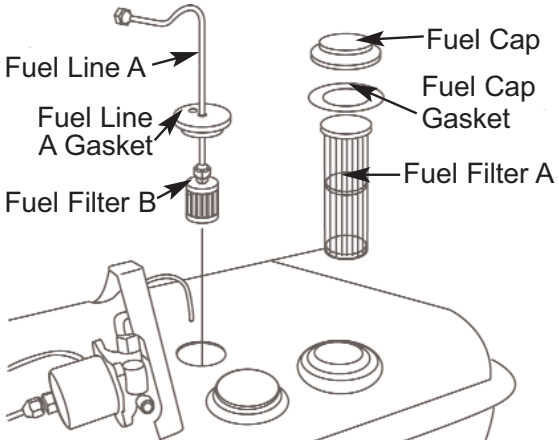

Figure 12. Remove Tank Fuel Filter

PUMP PRESSURE ADJUSTMENT

1. Remove right side panel.

(If not using an accessory fuel pressure gauge, please skip to #4)

2. Remove air vent screw.
3. Insert accessory fuel pressure gauge at outlet of air vent screw.
4. Adjust pump pressure by turning pressure adjusting screw. See Figure 13.
   i. Turn pressure adjusting screw clockwise to increase pressure.
   ii. Turn pressure adjusting screw counterclockwise to decrease pressure.
5. Set pump pressure to 125 PSI (+/- 6 PSI).

We do not recommend adjusting the pump pressure if the red markings on the pump body and pressure adjusting screw are aligned with each other.

NOTE: Use only original equipment replacement parts. Use of alternate or third party components will void any warranty and may cause unsafe operating conditions.

6. Stop heater (see OPERATION, page 7).
7. If accessory pressure gauge is being used, remove pressure gauge.
8. Plug in end of filter cover, and replace air vent screw and panel..

NOTE: If heater does not ignite when heater is turned on, please turn AIR VENT SCREW counter clockwise to release air, then turn OPERATION SWITCH back on.

NOTE: An accessory service fuel pressure gauge is available for accurate fuel pressure testing. Please call 1-800-641-6996 for more information.

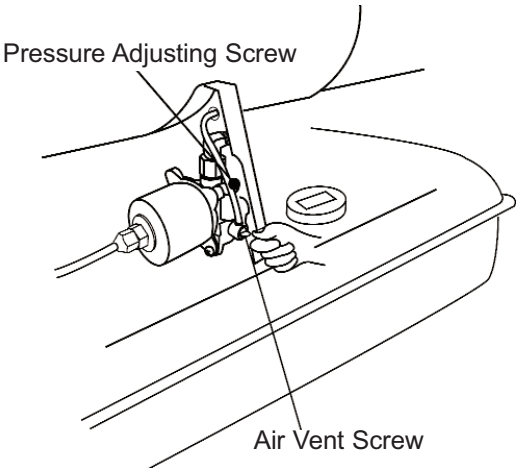

Figure 13. Pump Pressure Adjustment

AIR BLEED DIRECTIONS

If your heater fails to ignite, having air trapped in the fuel pump may be the cause. Air in the fuel pump will cause ignition failure and is often accompanied by a loud "grinding" or vibrating sound being made by the fuel pump. This heater is designed to easily remove any air in the fuel pump by simply following the air bleeding procedure below:

1. Fill fuel tank with K-1 kerosene. Turn the Air Vent Screw 3 full turns counterclockwise from the factory closed / fully clockwise position. (This will allow air to escape during operation). See Figure 14.

2 Start the ignition sequence by following the standard ignition procedures outlined on page 6 (directions continued on next page).

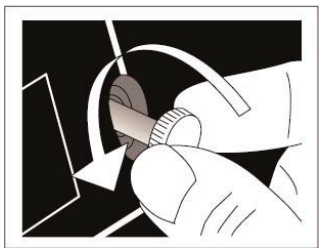

Figure 14. Opening Air Vent Screw

© 2019, Pinnacle Climate Technologies, Inc.

Maintenance (Continued)

AIR BLEED DIRECTIONS (Continued)

3. Allow the heater to attempt ignition for 3-5 seconds, during which time you may hear a loud "grinding" or vibration sound.
4. If your heater has not ignited, re-start the ignition sequence. Once the heater has ignited, turn the Air Vent Screw clockwise until fully hand-tightened. See Figure 15. Any air trapped in the fuel pump will have been purged.
5. Your heater is now ready for operation.
6. Re-fill your heater with fuel before it runs out. This will prevent the fuel lines and fuel pump from drawing in air and having to go through the air bleeding procedure again.

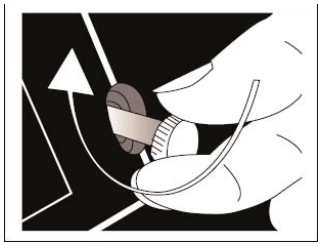

Figure 15. Tightening Air Vent Screw

Wiring Diagram

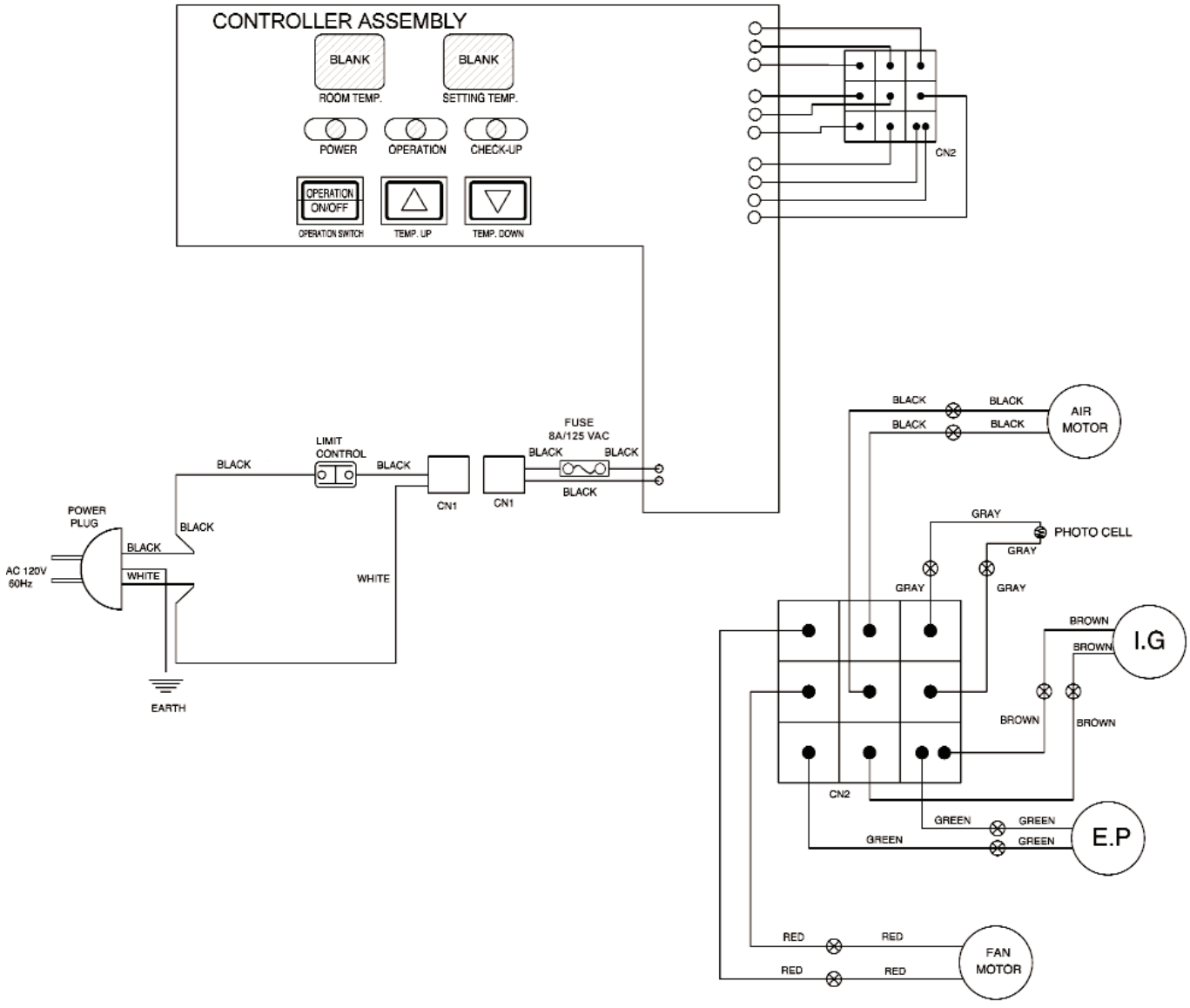

Exploded View

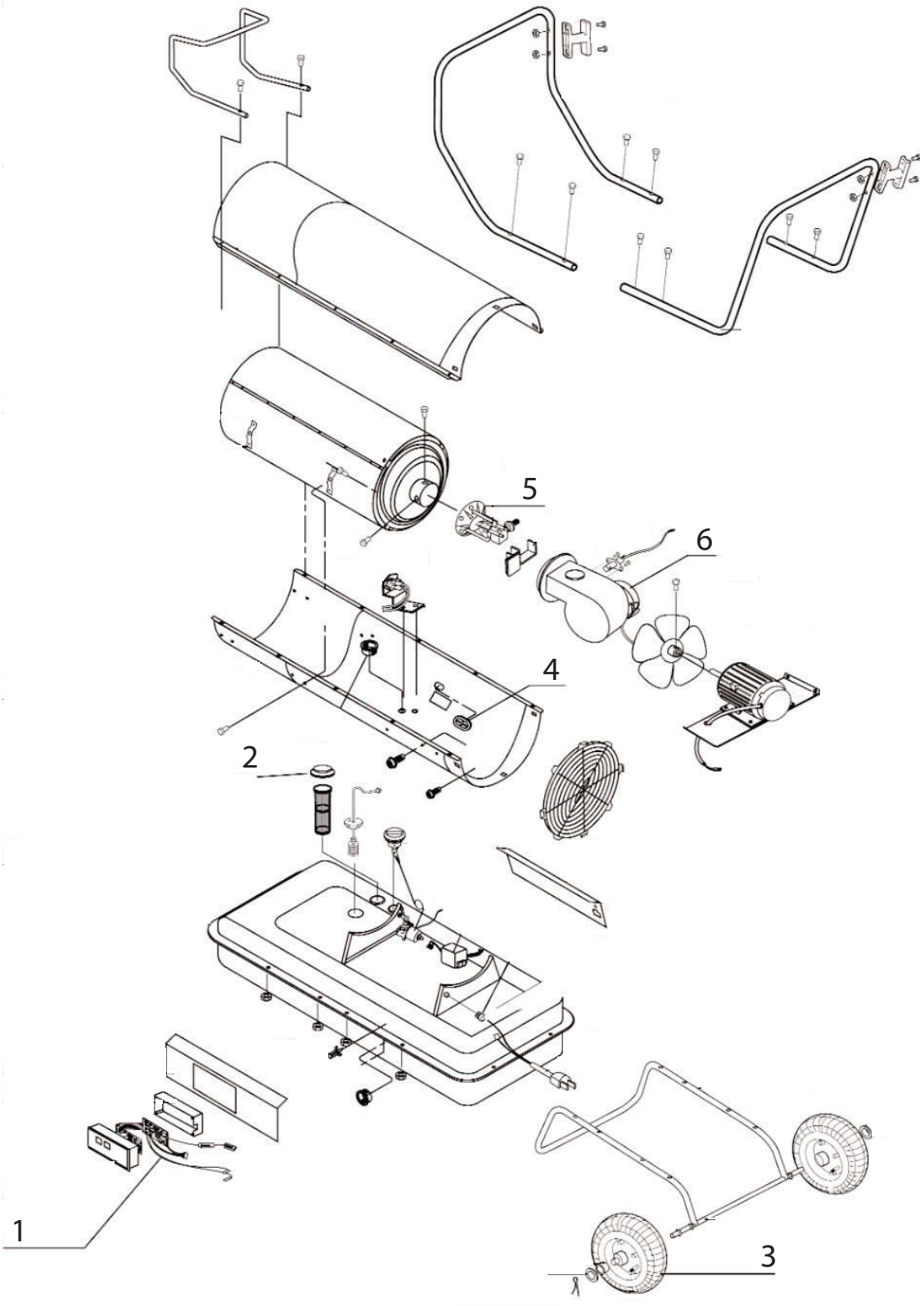

© 2019, Pinnacle Climate Technologies, Inc.

Parts List

#	Description	MH-400T-KFA
1	PCB Assembly	70-027-0800
2	Fuel Cap Assembly	70-006-0200
3	Pneumatic Wheel	70-041-0110
4	Photocell	70-016-0150
5	Nozzle	70-015-0750
6	Fan Assembly	70-024-0700

© 2019, Pinnacle Climate Technologies, Inc.

Troubleshooting Guide

Problem	Possible Cause	Solution
Heater Ignites, but main PCB shuts off after a short period of time. Lamp flickers and LED display shows "E1".	1. Incorrect pump pressure. 2. Dirty fuel filter. 3. Nozzle is dirty. 4. Photocell lens is dirty. 5. Photocell not installed properly.. 6. Improper electrical connection between main PCB and photocell. 7. Photocell is defective	1. Adjust pump pressure (see page 10). 2. Clean / replace fuel filter (see page 10). 3. Clean / replace Nozzle (see page 8). 4. Clean / replace photocell (see page 9). 5. Adjust photocell position (see page 9). 6. Check wiring connections (see wiring diagram on page 11). 7. Replace photocell (see page 9).
Heater will not operate or motor runs for a short time. Lamp flickers and LED display shows "E1".	1. No kerosene in the fuel tank. 2. Incorrect pump pressure. 3. Corroded spark plug or incorrect plug gap. 4. Dirty fuel filter. 5. Dirty nozzle. 6. Moisture in fuel tank. 7. Improper electrical connection between transformer and circuit board. 8. Ignitor wire not connected to spark plug. 9. Defective ignitor. 10. Air in fuel line	1. Fill tank with fresh kerosene. 2. Adjust pump pressure (see page 10). 3. Clean / replace spark plug (see page 9). 4. Clean / replace fuel filter (see page 10). 5. Clean / replace nozzle (see page 8). 6. Rinse fuel tank with clean, fresh kerosene (see page 7). 7. Inspect all electrical connections (See wiring diagram on page 11). 8. Re-attach ignitor wire to spark plug (see page 9). 9. Replace ignitor. 10. See air bleed directions, page 10.
Fan does not operate when heater is plugged in and power switch is in the "ON" position. The lamp is flickering or and LED display shows "E1" or "E2".	1. Thermostat is set too low. 2. Broken electrical connection between main PCB and motor.	1. Rotate thermostat to a higher setting 2. Inspect all electrical connections (see wiring diagram on page 11).
Lamp is flickering and LED display shows "E3".	1. Thermostat switch has failed. 2. Short circuit	1. Replace thermostat switch (see wiring diagram on page 11). 2. Inspect all electrical connections (see wiring diagram on page 11).
Lamp is flickering and LED display shows "E4".	1. Sensor disconnected	1. Check limit control thermostat and/ or check sensor connection
Lamp is flickering and LED display shows "E5".	1. Temperature limit safety device is overheated	1. Wait until unit cools down.
Other problems	1. Poor combustion - Flames extending beyond heater - Low heat output 2. Power failure - No power supply to heater	1. Poor combustion - Align the red mark between the air screw and pump body 2. Power failure - Check / replace fuse

© 2019, Pinnacle Climate Technologies, Inc.

Limited Warranty

Pinnacle Climate Technologies, Inc. warrants this heater to the original retail purchaser only, to be free from defects in material and workmanship for a period of one (1) year from the date of initial purchase. This product must be properly installed, maintained and operated in accordance with the instructions provided.

Pinnacle Climate Technologies, Inc. requires reasonable proof of your date of purchase from an authorized retailer or distributor. Therefore, you should keep your sales slip, invoice or cancelled check from the original purchase. This Limited Warranty shall be limited to the repair or replacement of parts, which prove defective under normal use and service within the warranty period, and which **Pinnacle Climate Technologies , Inc.** shall determine at its reasonable discretion.

This warranty does not apply to products purchased for rental use.

This Limited Warranty does not cover any failures or operating difficulties due to normal wear and tear, accident, abuse, misuse, alteration, misapplication, improper installation or improper maintenance and service by you or any third party. Failure to perform normal and routine maintenance on the heater, shipping damage, damage related to insects, birds or animals of any kind, and damage due to weather conditions are also not covered. In addition, the Limited Warranty does not cover damage to the finish, such as scratches, dents, discoloration, rust or other weather damage, after purchase.

All transportation costs for the return of damaged product or parts will be the responsibility of the purchaser. Upon receipt of damaged item, **Pinnacle Climate Technologies, Inc.** will examine the item and determine if defective. **Pinnacle Climate Technologies, Inc.** will repair or replace and return the item, freight pre-paid.

If **Pinnacle Climate Technologies, Inc.** finds the item to be in normal operating condition, or not defective the item will be returned freight collect. This Limited Warranty is in lieu of all other express warranties. **Pinnacle Climate Technologies, Inc.** disclaims all warranties for products that are purchased from sellers other than authorized dealers or distributors.

AFTER THE PERIOD OF THE ONE (1) YEAR EXPRESS WARRANTY EXPIRES, **Pinnacle Climate Technologies, Inc.** DISCLAIMS ANY AND ALL IMPLIED WARRANTIES, INCLUDING WITHOUT LIMITATION THE IMPLIED WARRANTIES OF MERCHANTABILITY AND FITNESS FOR A PARTICULAR APPLICATION. FURTHER, **Pinnacle Climate Technologies, Inc.** SHALL HAVE NO LIABILITY WHATSOEVER TO PURCHASER OR ANY THIRD PARTY FOR ANY SPECIAL, INDIRECT, PUNITIVE INCIDENTAL, OR CONSEQUENTIAL DAMAGES. **Pinnacle Climate Technologies, Inc.** assumes no responsibility for any defects caused by third parties. This Limited Warranty gives the purchaser specific legal rights; a purchaser may have other rights depending upon where he or she lives. Some states do not allow the exclusion or limitation of special, incidental or consequential damages, or limitations on how long a warranty lasts, so the above exclusion and limitations may not apply to you.

Pinnacle Climate Technologies, Inc. does not authorize any person or company to assume for it any other obligation or liability in connection with the sale, installation, use, removal, return or replacement of its equipment, and no such representations are binding on **Pinnacle Climate Technologies, Inc.**

Always be sure to specify the model number and serial number when making any claim with **Pinnacle Climate Technologies, Inc.** For your convenience, use the space provided below to list this information.

Locating Your Serial Number:

Your serial number can be found on a white label on the right side cover of your heater. It will be a series of 9 digits. For Example: 131234956. Have your Serial Number ready before calling customer service at 800-641-6996.

Model #:_____

Serial #:_____

Date of Purchase: _____

© 2019, Pinnacle Climate Technologies, Inc.